CHS4 - Ceiling Hinge Swivel Mechanism

Technical Sheet

DESIGN HIGHLIGHTS

- Near silent motor system
- Modular format ensures simple installation
- Range of standard sizes
- Sized to suit options available
- Learnable left and right limits and then 3 set positions available

OPTIONS

- Telescope version with non swivel - CHT 4, 5 & 6
- Non swivel versions are available in 3 standard sizes - CH3, 4, 5 & 6
- Marine suitable option with IP rated outdoor options with the M-CH3,4,5 and 6
- Any RAL colour available
- Bang & Olufsen / Loewe mount option

UP

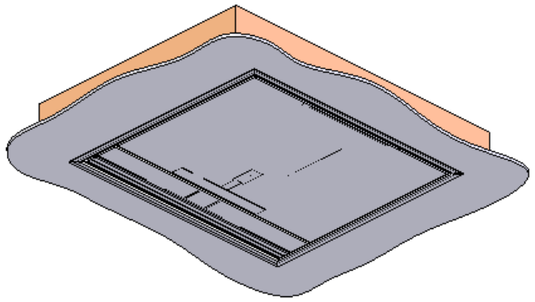

HINGE DOWN

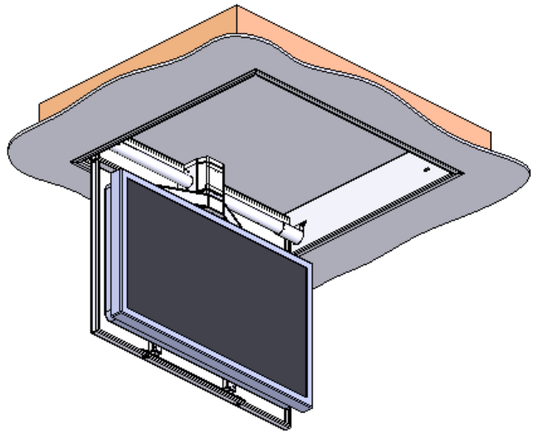

HINGE AND SWIVEL DOWN

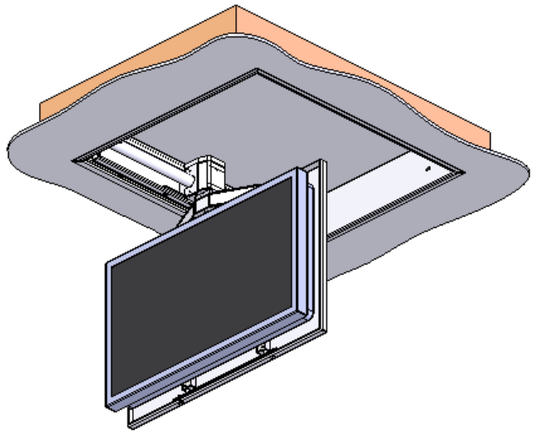

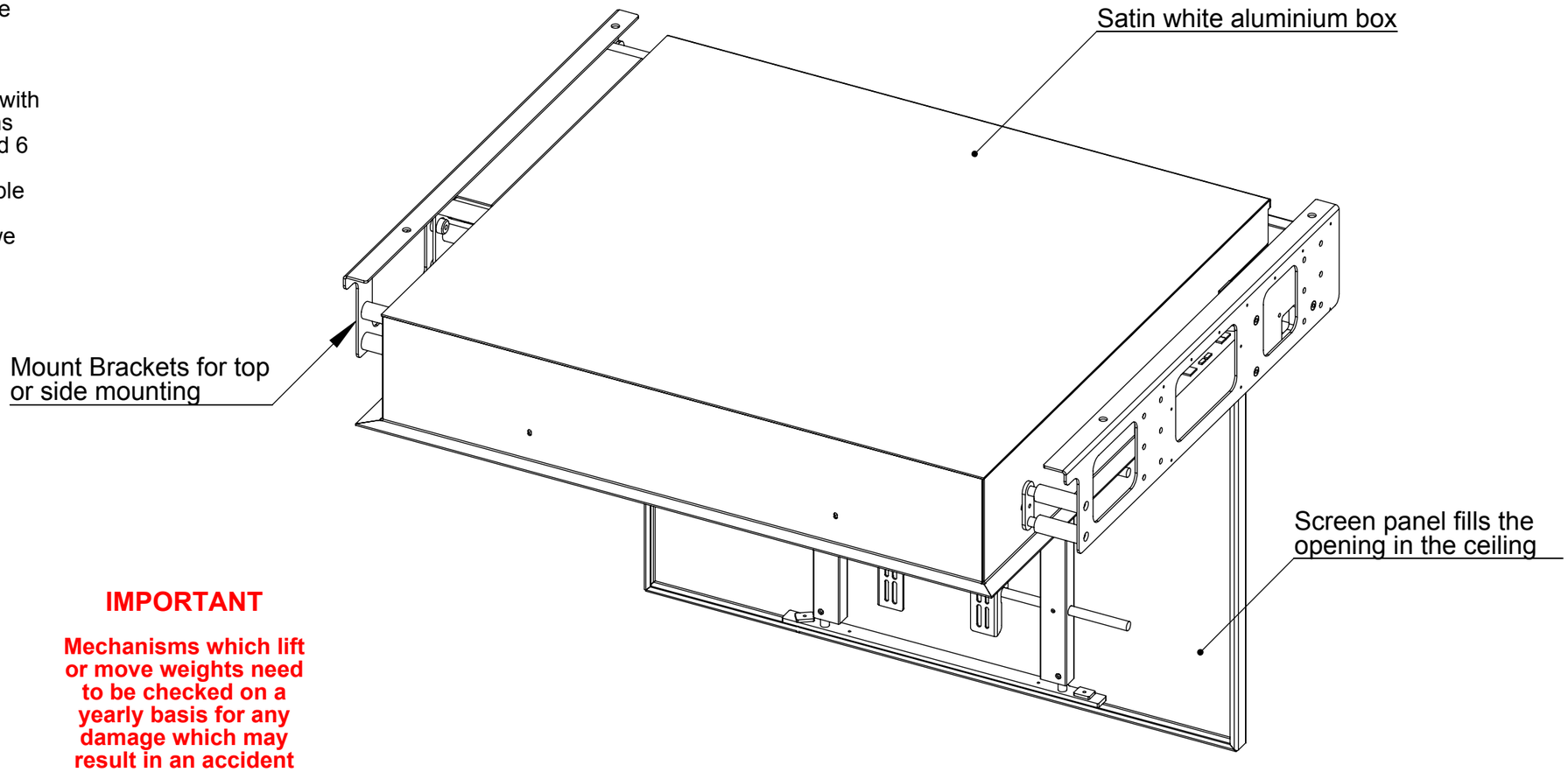

FUNCTION

The CHS mechanism hinges a flat screen television from a ceiling through 90 degrees and then can swivel up to 180 degrees in either direction.

SUITABILITY

The CHS4 is one of four standard sizes available at present. See CHS3, 5 & 6 for smaller and larger mechanisms.

SPECIFYING

The CHS4 takes a maximum screen size of 1110 [43.7"] x 680mm [26.8"] x 140mm [5.5"] deep. Maximum weight of 50Kg [110lb].

Screens with standard bolt fixings on the back can be fitted. See Sheet 5.

CONTROL

Supplied with basic infrared remote. Can be learnt by many learning remote Also has contact closure and RS232 so can be operated by switches, Crestron, AMX or Lutron systems.

WARNING

It is the responsibility of the installer to warn all potential end users of the dangers of interfering with mechanisms during operation

IMPORTANT

Mechanisms which lift or move weights need to be checked on a yearly basis for any damage which may result in an accident

www.futureautomation.co.uk tel: +44 (0) 1438 833 577 fax: +44 (0) 1438 833 565

future automation
moving audio visual solutions

FITTING NOTES

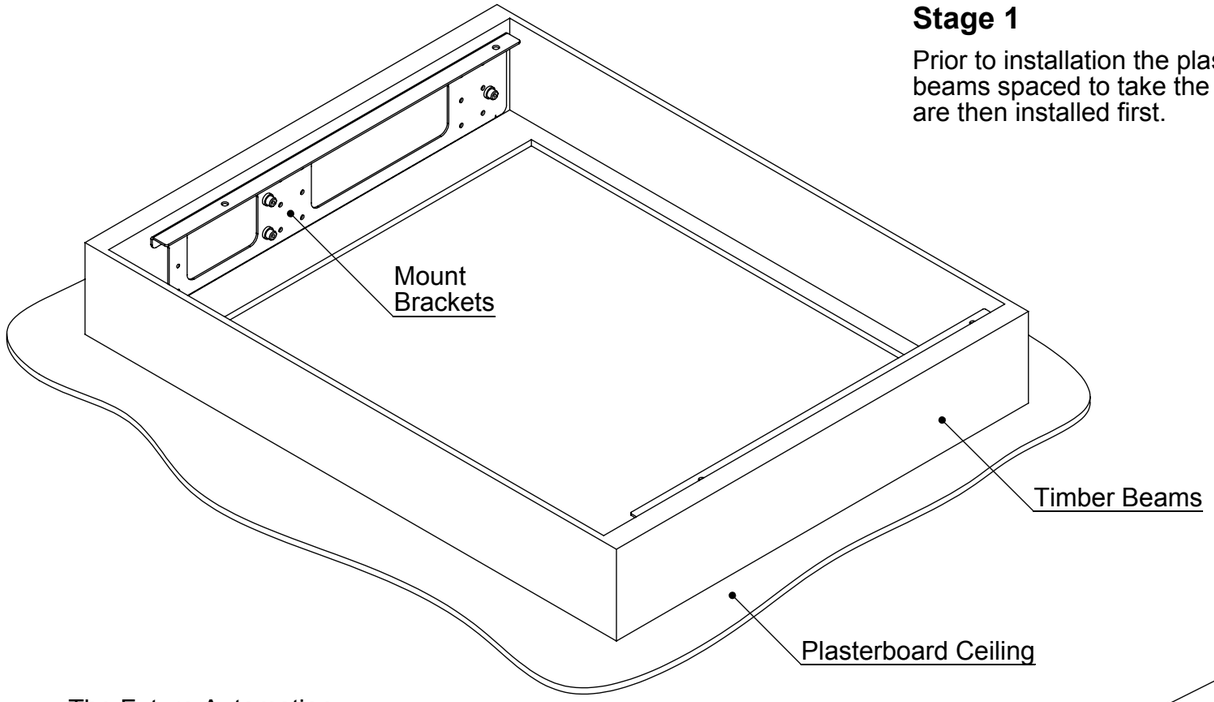

Stage 1

Prior to installation the plasterboard can be in place with wooden beams spaced to take the mechanism. These Mount Brackets are then installed first.

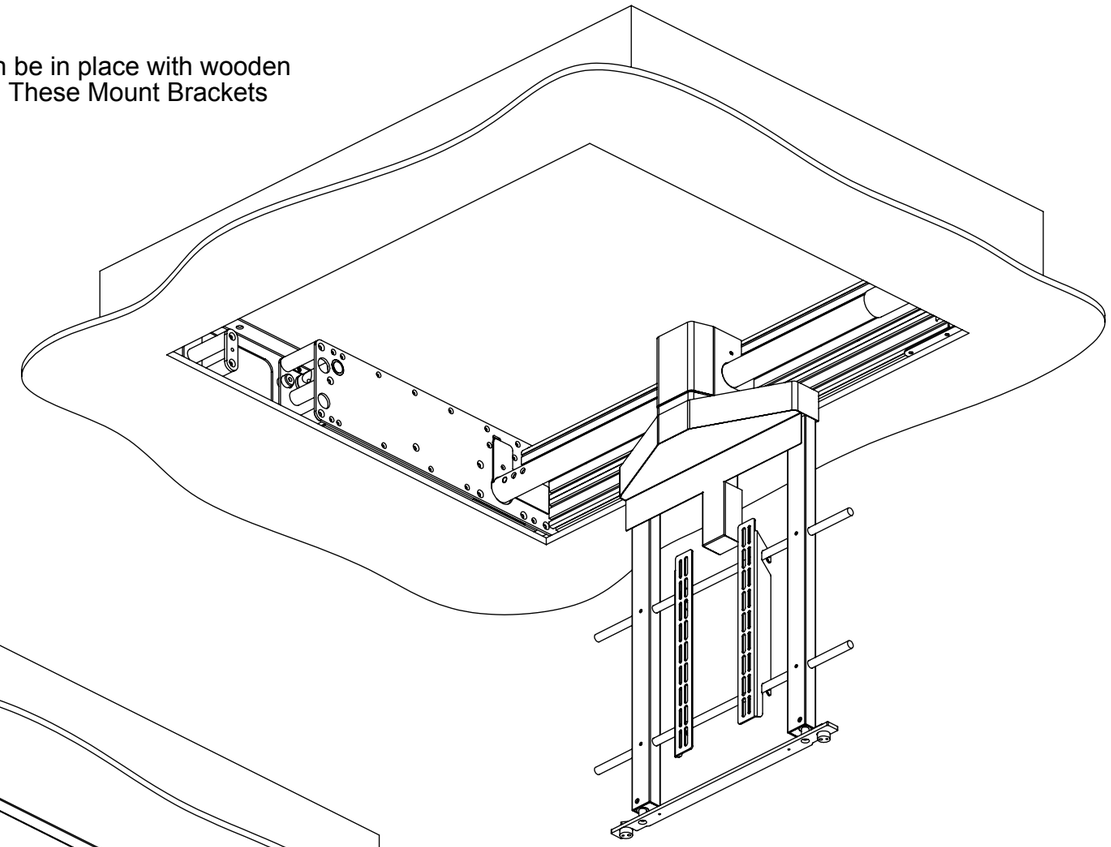

The Future Automation Ceiling Hinge has some great features to make installation as simple and quick as possible.

Stage 2

The mechanism motor assembly can be lifted into position by three people. The mechanism expands outwards to locate within the Mount Brackets.

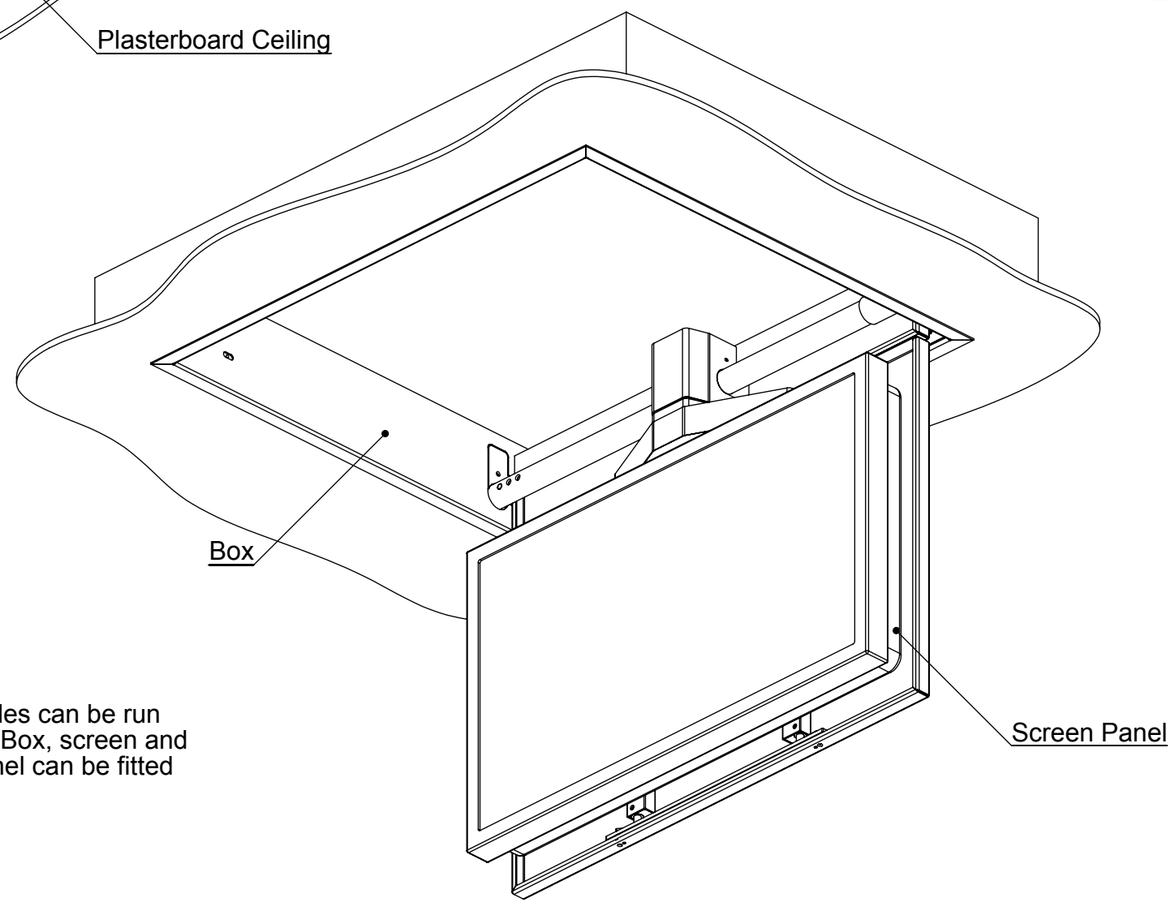

Stage 3

Signal cables can be run before the Box, screen and screen panel can be fitted in place.

SIDE MOUNTING

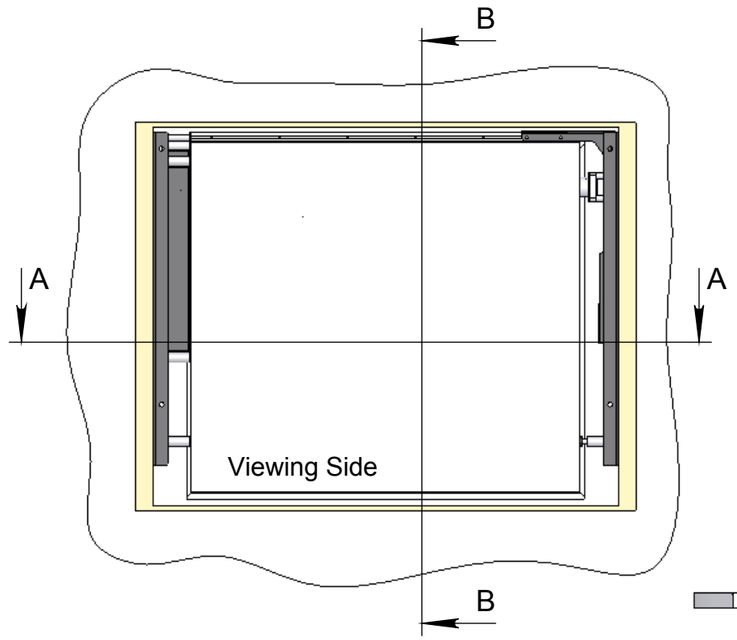

Side Section BB

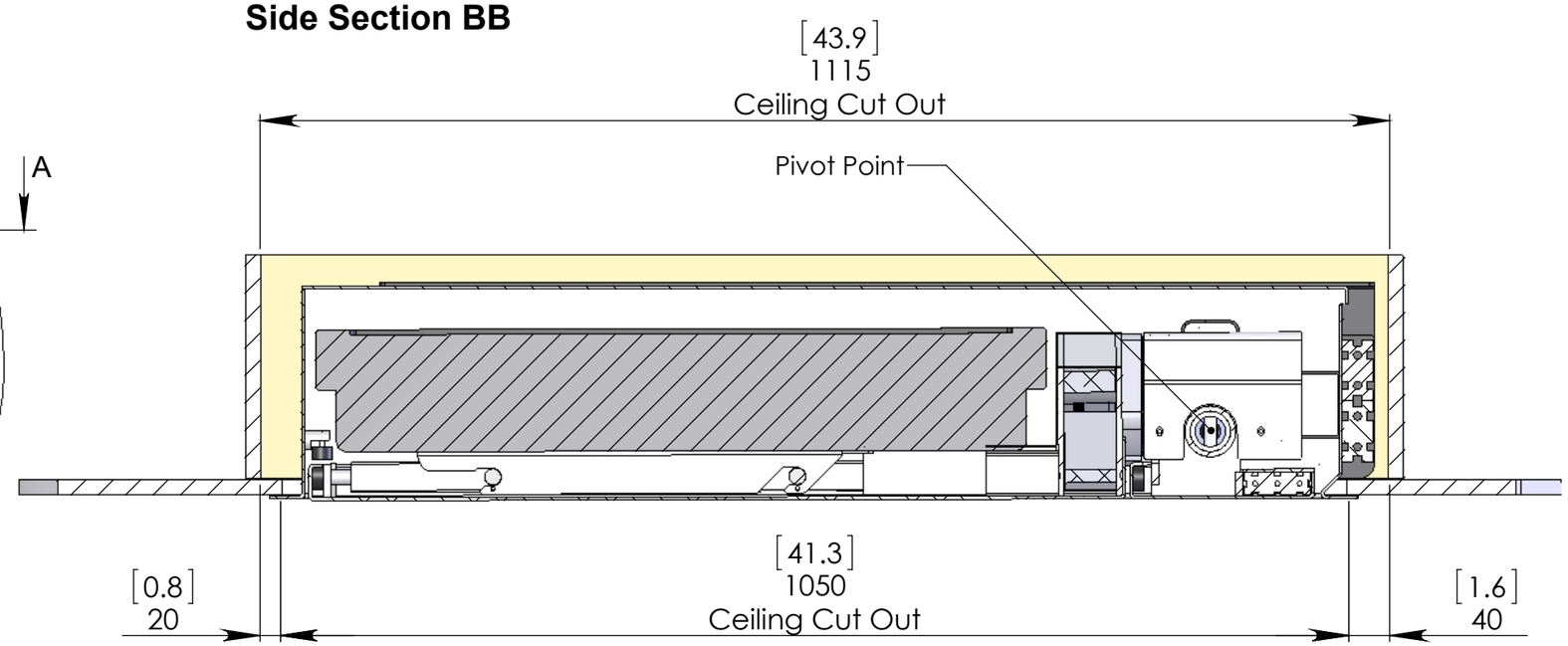

Front View Section AA

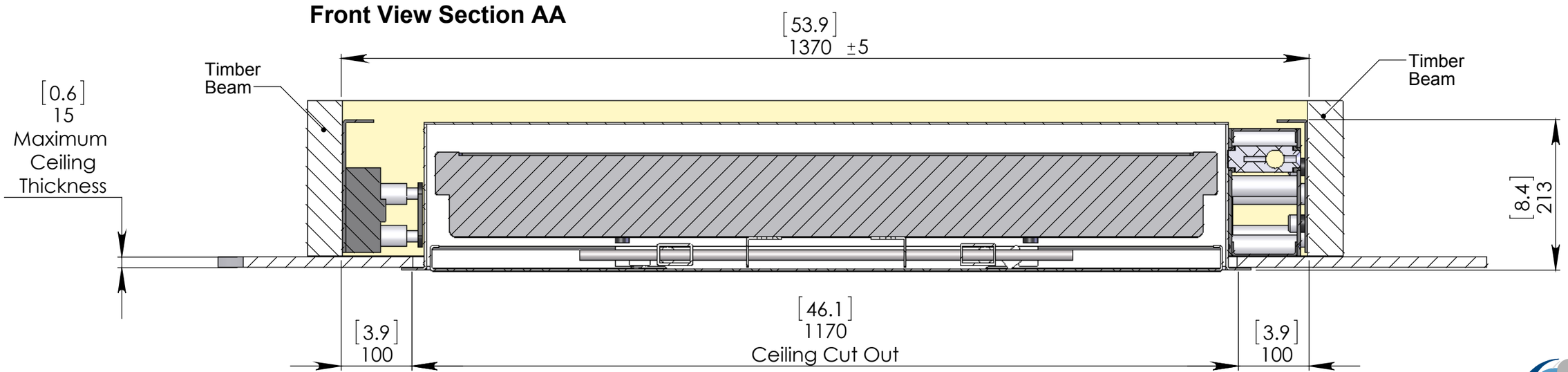

Mechanism just fixes to these timber beams at the sides

Mechanism weight is 110Kg

See CAD drawings for more dimensional information

TOP MOUNTING

Plan View

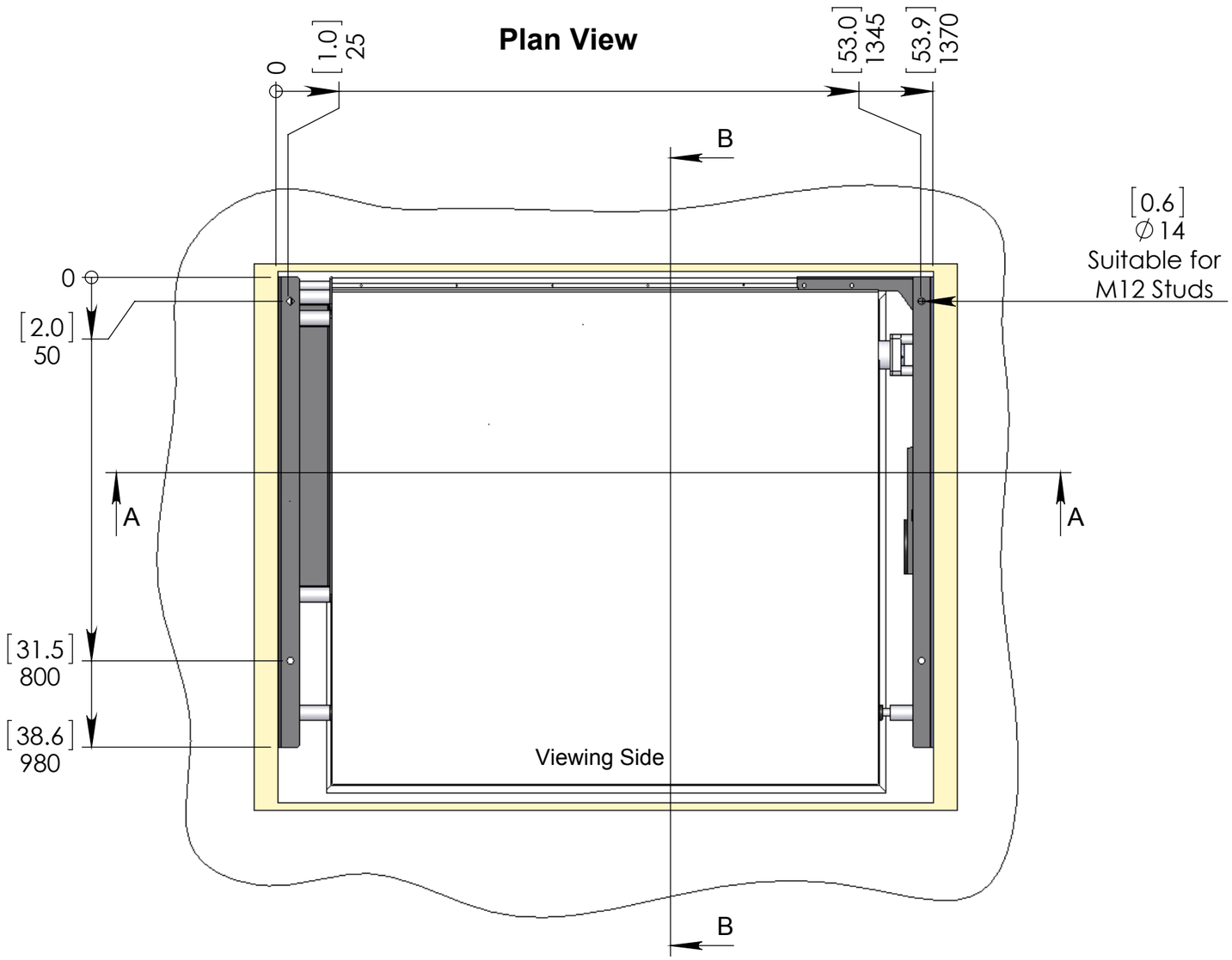

Side Section BB

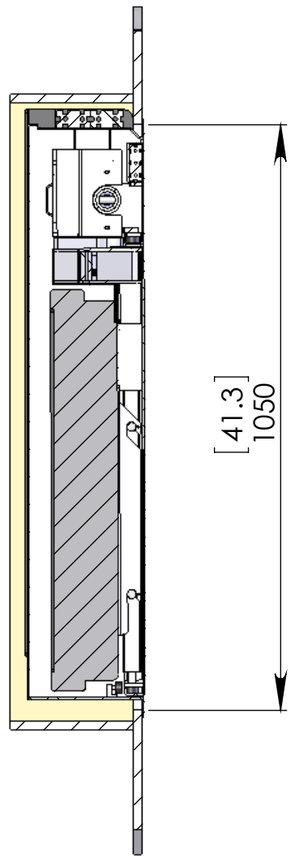

One option is to hang the mechanism from a concrete floor before the ceiling panels are finished around.

Holes are provided for four M12 studs/bolts.

If the ceiling panels have the opening size shown then all mechanism parts will be removable and serviceable without removing the ceiling.

The screen panel would be removed first followed by the box and the whole motor unit.

Front View Section AA

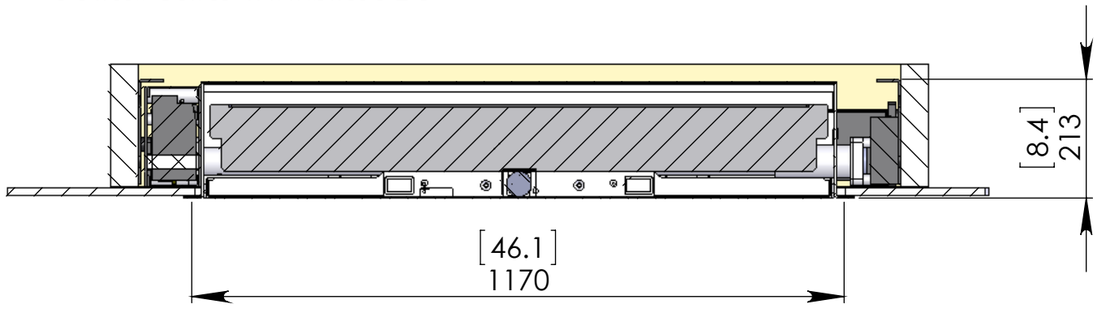

View Up Without Ceiling Panels

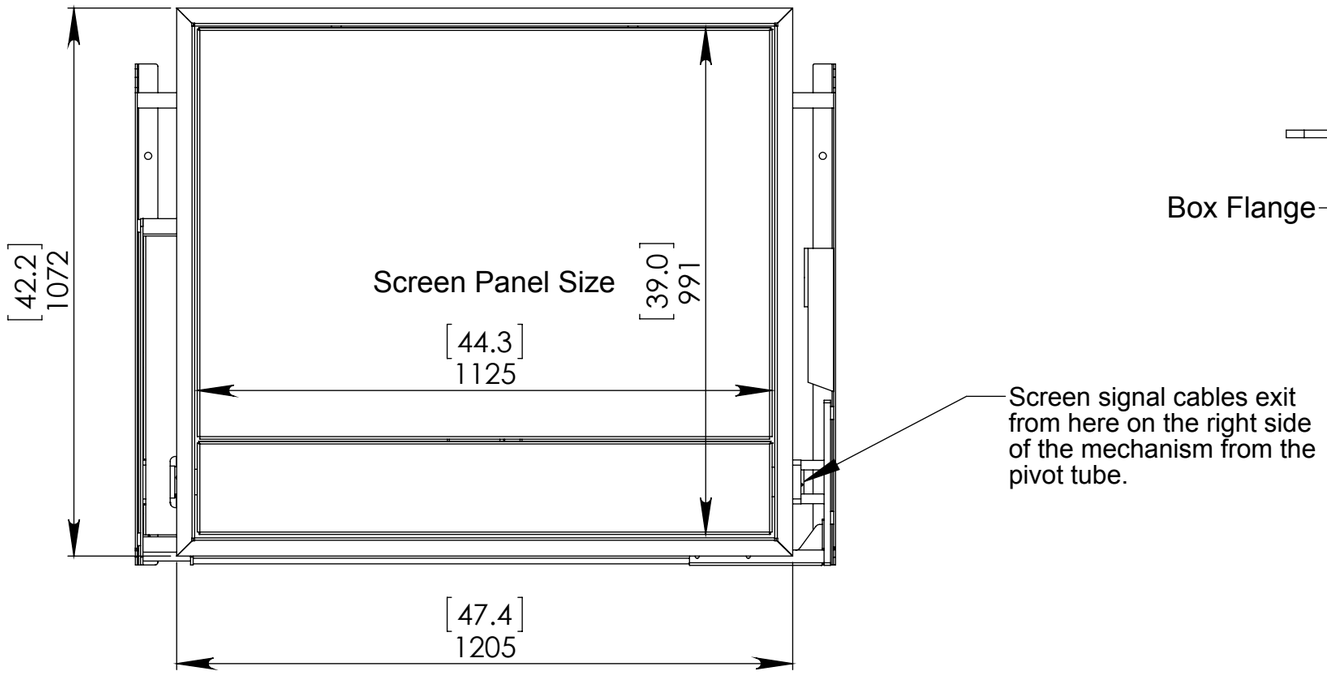

Side View Down

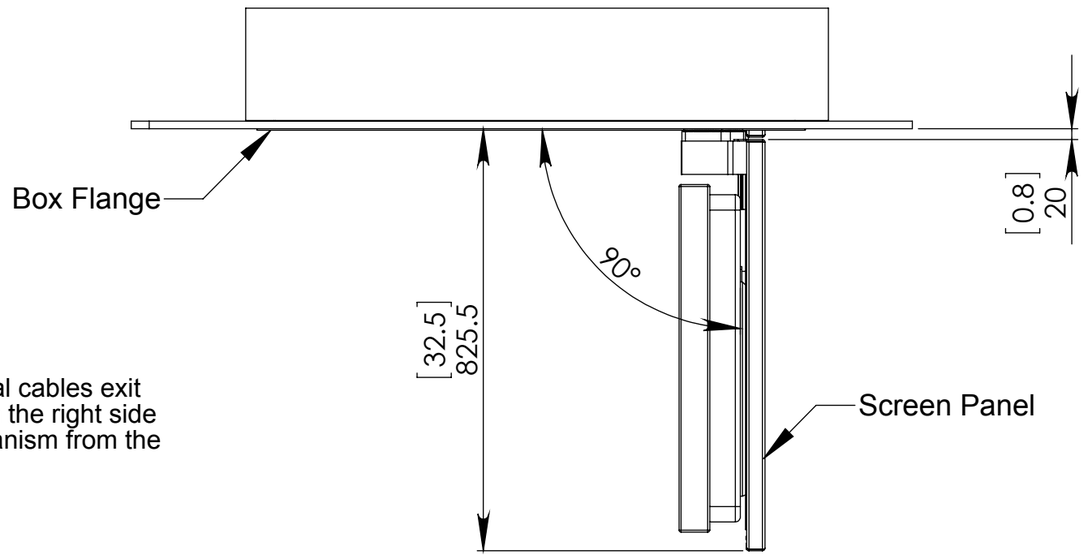

IMPORTANT NOTE!
There is only 20mm clearance between the screen panel and the ceiling when the mechanism rotates.
No ceiling panels can be added below the box flange.

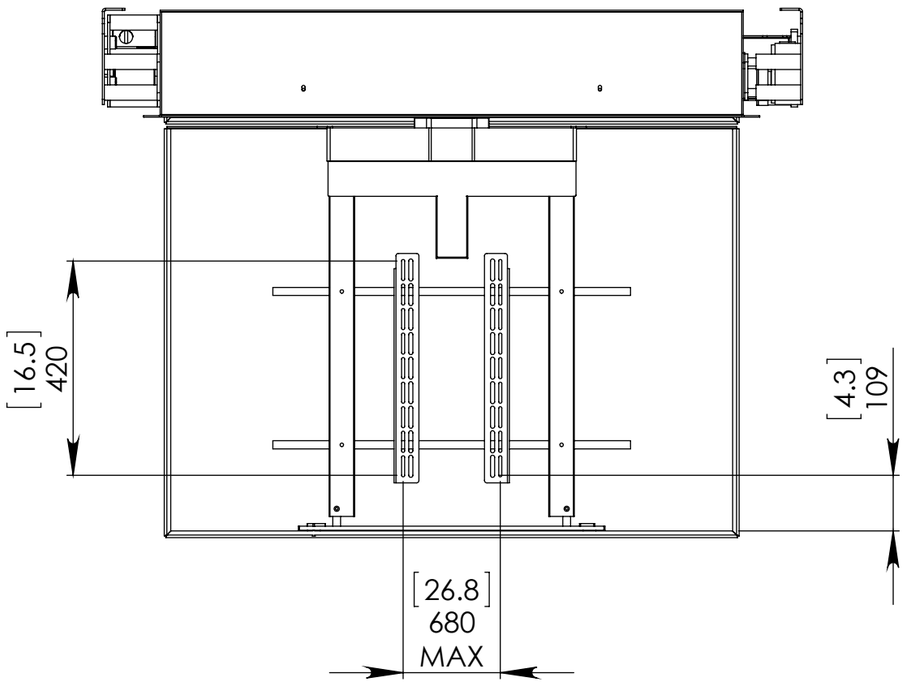

A control box 220 x 55 x 150mm [8.7 x 2.1 x 5.9"] needs to placed in an accessible location. It is supplied on a 3 metre [9ft 11"] flying lead.

It requires a 3 amp mains supply. Infrared RS232 and contact closure inputs need to be made to this box.

The slotted screen mount will accommodate any screen with a bolt pattern up to 680mm [26.8"] wide by 420mm [16.5"] high.